Course Code: EEE 1261
Course Title: Electronic Devices and Circuits
Assignment (Fall 2024)

Full Marks: 15 **Submission Date: 25 May 2025**

Instructions to be followed:

- Plagiarism is strictly prohibited — any copied assignment will receive zero marks.
- Submit a neatly handwritten assignment with clear headings, proper labeling, and organized formatting.
- Only hard copy submissions will be accepted. No submission will be allowed after the deadline.
- Use your own understanding and knowledge to complete the assignment. Getting help from friends may cost you later — ensure your work is original and independent.

Assignment Questions

		Mark
Q1.	Determine the following for the fixed-bias configuration of Fig. 1. *[CO2, PO2, C3, K2]* a. I_{BQ} and I_{CQ}. b. V_{CEQ}. c. V_B and V_C . d. V_{BC}. 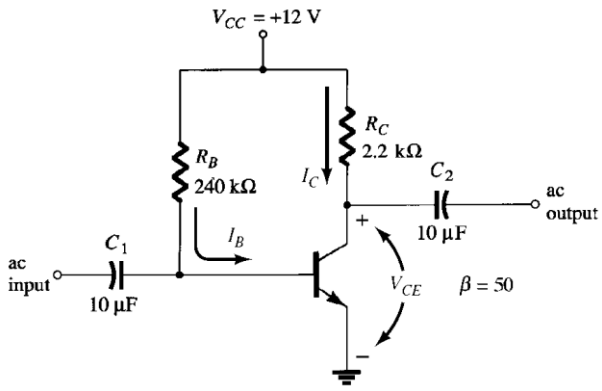 Fig. 1.	7.5
Q2.	Sketch the transfer characteristics for an n-channel depletion-type MOSFET with $I_{DSS} = 10$ mA and $V_P = -4$ V. *[CO2, PO2, C3, K2]*	7.5

1. Statement of Course Outcome and Mapping:

COs	CO Statements	BL	PO	KP	WP	EA	DMA	AT
CO2	Apply the knowledge of semiconductor diodes, BJT, MOSFET, JFET, SCR, TRIAC, DIAC and UJT to solve complex engineering problems such as rectification, switching and amplification.	C3	PO2	K2	-	-	Lectures, Text Book, PPT, PDF, White Board Writing	Assignment
Legends: *CO-Course Outcomes, BL-Blooms Taxonimy Level, PO-Program Outcomes, KP-Knowledge Profile, WP-Complex Engineering Problem, EA-Complex Engineering Activities, DMA-Delivery Method & Activities, AT-Assessment Tools*								

Marking Rubric

Question	Excellent (7.5)	Good (6-7)	Satisfactory (5-5.5)	Inadequate (0-4.5)
Q1. (CO2, PO2, C3, K2)	All answers correct; steps clear.	Few minor errors.	Some correct; major mistakes.	Mostly wrong or unclear.
Q2. (CO2, PO2, C3, K2)	Correct sketch; key points shown.	Small errors in plot or labels.	Basic sketch; major issues.	Wrong or no sketch.